A Research Study of a Technique for Adjusting Clarinet Reeds
Author(s): Lawrence J. Intravaia and Robert S. Resnick
Source: *Journal of Research in Music Education*, Vol. 16, No. 1 (Spring, 1968), pp. 45-58
Published by: Sage Publications, Inc. on behalf of MENC: The National Association for Music Education
Stable URL: http://www.jstor.org/stable/3344436

Lawrence J. Intravaia

Robert S. Resnick

A Research Study of a Technique for Adjusting Clarinet Reeds

THE MAIN PURPOSE of this project was to find a technique of adjusting clarinet reeds that would not disturb the basic structural balance of the reed. In carrying out the project the techniques of preparation and adjusting of single reeds which are described by leading clarinet and saxophone artists were investigated. Related to this was the examination of a quantity of commercial clarinet reeds.

Since the procedures involved were those available to the performer-teacher at home or in the studio, the project should be regarded only as a preliminary investigation into a rather complex problem. It was undertaken with the hope of bringing to light some possibilities which might serve as a basis for further and more scientific investigation.

COMMERCIAL REEDS

As every single- and double-reed player knows, the relative success attained in performance is dependent upon the behavior of a piece of fickle organic material known as *Arundo donax* (a species of grasscane from which reeds are made). Most of the dilemma may be attributed to the fact that this grasscane, as a product of nature, is in a constant state of change. Except for normal procedures followed in growing, curing, and processing, the cane varies according to such factors as climate, temperature, humidity, and soil.[1] The reed manufacturer, and the per-

[1] As a part of this research project, Mr. Resnick, with the express purpose of noting growing, curing, and processing methods, visited plantations in southern France on which *Arundo donax* (reedcane) is grown.

The Van Doren plantation is in the Var region, in Le Lavendou near Toulon, close to the Mediterranean Sea. The soil is quite sandy and very moist. There is a great amount of sunshine throughout the year and very little frost. When the weather is warm over an extended period of time, the soil may require irrigation.

The cane grows rather wild. In fact, it grows in the same fields as Van Doren's grape plants from which he produces wines. In the Var region, the roots of the cane grow close to the top of the soil. Quite often there is a heavy, steady wind. Because

former who either uses or makes his own reeds, are at the mercy of these variables.

Of the basic materials in reed manufacture, *Arundo donax* is most widely used and accepted by performers. Synthetic materials are as yet in the process of development and refinement. In the minds of most performers, especially professionals, reeds made from grasscane give the best overall results under a greater variety of performance conditions. Research in this project was, therefore, limited to reeds made from cane.

The project was further limited to manufactured, that is, mass produced reeds, rather than those advertised as "hand made." The mass produced reed was considered the logical subject for this study since it was found that considerable lack of uniformity, strength, and precision of manufacture is to be found in a box of reeds. Another box of the same strength but differing brand increases the inconsistencies. Figure 1 gives the measurements of reeds from one box of medium strength reeds of six different brands. The measurements indicate that although a similarity exists in the proportionate thickness among all brands, there is a slight variation in overall thickness. Other inconsistencies (see the following list of factors considered in selecting a reed) serve to point up the necessity for adjusting and fixing reeds to satisfy requirements of the individual performer. Adjustment must be based on the particular instrument and mouthpiece used by the individual as well as the desired type of tone quality.

Selection of Reeds

The following list, drawn from literature and the authors' experiences, presents factors which players of single-reed instruments consider when

---

of the shallow roots and heavy wind, plus the fact that cane grows quickly and tall, cane often falls to the ground. This is one of the causes for black spots in the cane coloring. In warm weather, cane can grow as much as 30 centimeters a day.

Cane has peculiar growth habits. It may grow abundantly in one spot and not at all a few feet away. Generally, each stalk of cane has the same diameter from the bottom to the top, and not larger at the bottom becoming progressively narrower toward the tip. For fertilization of cane, some farmers use manure while others do not. Van Doren does not use manure for fertilizer; he claims it causes the cane to grow soft.

During the first year of growth the cane is very red. The second year it is a lighter green with a touch of yellow. At this time there is a leaf which covers the cane. When it rains, water gets in between the leaf and the cane; this is the reason for the marble effect and coloration of the cane that we see. According to Van Doren, this variety of color has no great effect on the playing quality of the reed. It is important, however, that the varnish or gloss of the cane should not be damaged. Cane with large black spots and damaged varnish is made into fishing poles.

Cane is cut during the months of January and February and dried in March. It is cut after two years of growth and dried in the sun about eight days. During this time the cane is placed on long racks in open fields and turned every day or so to aid the coloration process. It is then cut up according to size and stored in canvas sacks and left in a shed for a year. After this time the dried and cured cane is shipped to the

Reed Thickness Measurements

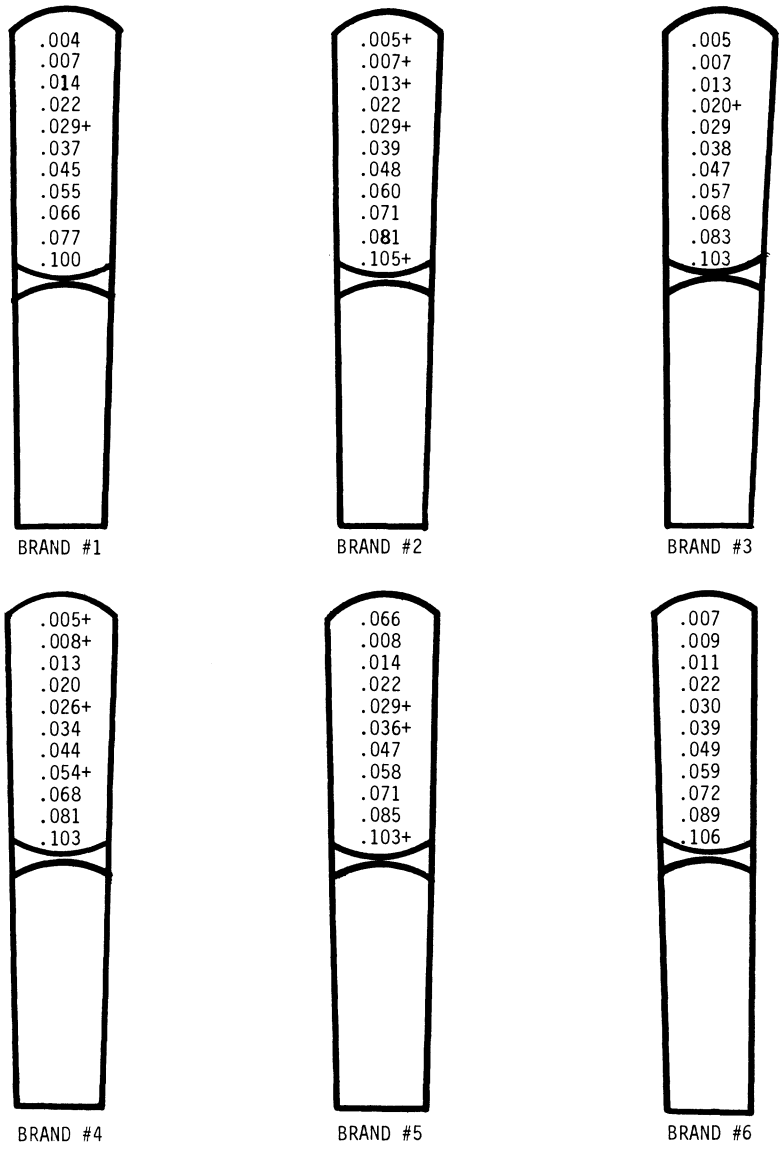

Measurements are in thousandths of an inch. Reeds were measured beginning at the tip, then 1/6″ back of the tip, then 1/8″ apart from that point to the shoulders. Measurements are averages of each brand from a single box of 25 reeds.

Figure 1

manufacturer for production into reeds. In good years, the cane is bagged and set aside for production at a later date. The sun drying is very important; Van Doren

selecting a reed. The location of various parts of the reed is shown in Figure 2.

1. The table of the reed at the butt end must be flat.
2. The vamp should be smooth, without raised or rough fibres.
3. The beginning of the vamp, at the shoulders, should be the same distance from the tip on each side.

REED NOMENCLATURE

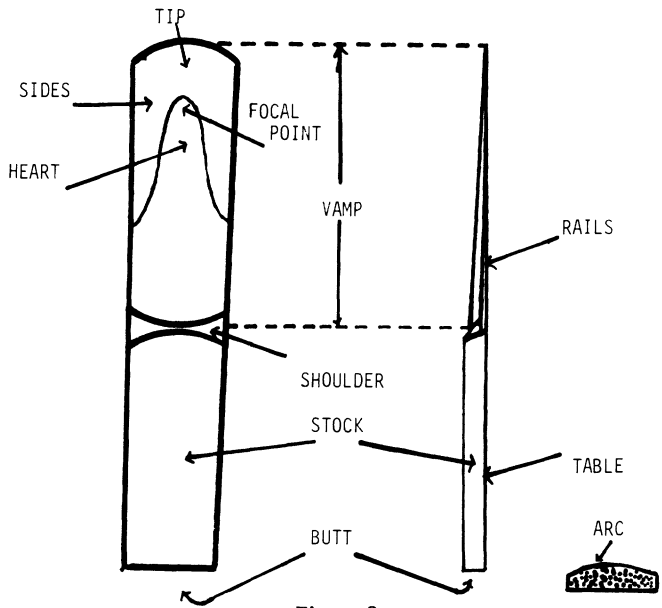

Figure 2

likes a very small amount of green color remaining on the cane before it goes into the shed.

The sun's strength during the drying process is important to the color of the cane. Occasionally the sun is so strong that it will turn a piece of cane black if care is not taken. The greatest fear of cane growers is that frost will attack and crack the cane and ruin an entire crop, as it did in 1956.

Much of the good cane grows along the banks of a river or stream. The cane with the most cellulose seems to be the best quality. In Hyères the cane is of very good quality. According to some sources, the cane farther up the coast of Fréjus is inferior to that of the Var region for making into reeds.

Van Doren has attempted to replant some of his cane in the same field, but without success. It seems that if it does not grow naturally, it does not grow at all. The cane transplants itself, the roots growing and expanding underground and forming new plants of different sizes. A cane plant may live a hundred years, but as soon as it blooms, it dies. As the roots get thicker and stronger they produce stalks with a larger diameter than the stalks produced by the young roots.

Many of the farmers in the Var region know only how to grow and cure cane and nothing of its possibilities for reed production. Some farmers sell cane for purposes other than reed manufacture. There is little or no control over the fact that many jobbers buy cane in any condition from these farmers and sell it to reed manufacturers.

4. The length of the vamp should cover the "window" of the mouthpiece (the opening of the facing).

5. Against artificial or natural light, the reed fibres should be evenly spaced, straight, close together, and balanced. Some performers prefer the fibres to run to the end of the reed tip; others prefer a clear reed tip of about 1/16″.

6. From a side view, the stock (sides of the reed from the butt end to the vamp) should be straight; the taper of the sides begins at the vamp.

7. The height of the arc at the butt end should be equal at each side.

8. There seems to be agreement that the reed color definitely should not be green. Some prefer "white" cane, others prefer "golden" cane, while some feel that some brown specks are most suitable. Grey, dark blotches are a hindrance to proper reed performance. A check for properly aged cane is to dip the butt end of the reed in water, or soak it in the mouth for a minute. If the cane is aged, an orange-brown arc will appear at the butt end.

9. There should be a balance between the two sides of the reed. A check on this characteristic may be made by playing with the mouthpiece tilted down (first on one side, then on the other), on the lower lip. If one side of the reed is found to be weaker than the other, the weaker side should be moved a fraction of an inch toward the edge of the mouthpiece (that is, off center).

10. The "heart" of the reed should be in the center of the vamp. This can be determined by examining the reed against strong artificial or natural light.

11. The tip of the reed should be even in strength and free of splits or hard spots. These points can be checked by bending the wet reed very genty against the thumbnail. Uneven or hard spots may be removed by scraping them with Dutch rush or silicon carbide paper.

Preparation of the Reed for Playing

Once a reed is selected most performers agree that some preparation of the reed is desirable. The reed is usually moistened, then placed on a piece of plate glass or lucite and rubbed down from the shoulder to the tip using the index finger. Mostening in saliva or water may vary from one to five minutes. Stein (10) recommends massaging both sides of the reed. Most authorities recommend testing the reed immediately while a few recommend allowing the reed to dry overnight before remoistening and testing. Some brands of reeds may not conform to the shape of the player's mouthpiece. Adjustment may be made by rubbing the tip and sides of the reed against silicon carbide paper or the fine side of an emery board.

Stubbins (11) recommends preparing the reed by rubbing (polishing) the back side of the reed with fine emery paper (grade 600), holding the reed with the table side down on the paper. Jaffrey (5) suggests burnishing the reed with silver rush before each playing session, then moistening and rubbing down with the finger as described above.

ADJUSTMENT AREAS

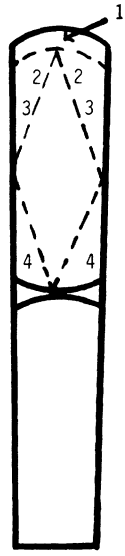

Figure 3

ADJUSTING TECHNIQUES

Standard Techniques

A compilation of practices by leading clarinet and saxophone artists reveals the following information on adjusting reeds. Clipping the tip of the reed is recommended if the reed seems soft or if it has a buzzy, edgy, thin, or nasal sound. A stiff reed on which it is hard to produce a sound should be scraped with Dutch rush on the sides just below the tip. Scraping should be toward the tip. If the reed is generally too stiff or heavy, Stein (10) and Jaffrey (5) recommend thinning down the entire vamp up to area 1 (see Figure 3). Some artists recommend softening a reed by "rolling" or "pressing" the vamp with a pencil or shaft of a ball point pen, the movement going from the reed shoulder toward the tip. If the sides are not balanced they can be thinned down in areas 2 and 3. If the low register has poor quality or poor response several actions may be taken: (a) setting the reed lower on the mouthpiece; (b) scraping from the shoulder up toward the tip about halfway up the vamp (area 4) but scraping more on the sides than in the center;[2] (c) lengthening the vamp by peeling off the "bark" of the cane at the shoulder, preferably with a reed knife.

If the middle register is poor or weak, it is generally recommended that the sides be scraped midway up the vamp between the edge and center, but not in the center. Scrape here (area 3) also if the tone is dull or if the staccato is poor in the middle register. If the high register is weak, the vamp may be too long and clipping the tip or thickening the tip

[2] Scrape in area 4 if the reed is sharp or too brilliant or if the staccato is generally poor.

with Garnet paper is recommended. Opperman (7) finds that, in this case, the rails may be too thin and suggests that the rails be sanded if the reed width allows some cane to be taken off. For a high register that is hard to produce, the tip may be too thick and Stubbins (11) recommends scraping the tip in area 1, using either Dutch rush or silicon carbide, starting about 1/16 of an inch back from the reed tip. Teal (12) clips the tip if the high notes are flat.

A squeaky reed has always been an enigma. Most authorities feel that some portion of the reed is vibrating differently than another portion. Several procedures are suggested: (a) check the tip for a hard spot or bulky fibre and thin it down if necessary; (b) check for a flat table and if the vamp is warped, make it even by rubbing it along sandpaper; (c) Bonade (2) states that one side of a squeaky reed is too strong at the middle or center, and the reed should be balanced. When a reed is shrill, lengthening the vamp by cutting back at the shoulders with a knife is suggested. This will lower the pitch and darken the sound somewhat. A reed should never be scraped in the exact center. As noted earlier, a serious inconsistency in reeds is the uneven table (bottom of reed at butt end), giving a "rowboat" effect. This may be adjusted by rubbing the reed table against a piece of silicon carbide placed against a flat surface, or a sharpening stone, until flat.

Other suggestions discovered while doing research on adjusting techniques include Bonade's (2) recommendation that the left side of the reed be left slightly stronger than the right side to avoid producing a choked sound. As a criterion of good tone quality, Jaffrey (5) uses B, 3rd staff line, as a check note. He then plays G on top of the staff, followed by slurring from that G to high E in order to determine good flexibility and response. To lower the pitch, Jaffrey reduces the bulk in the reed at the lower end; this makes for a greater effective length to the reed. He further states that reduction in the upper end of the reed raises the pitch and makes the effective reed length shorter. Willaman (16), in his text on the clarinet, disputes the claim of those artists who state that the reed's center should never be scraped. He strongly recommends scraping the "center zone" if the reed is too strong to vibrate properly or play comfortably for the performer.

Tenney has found that a "welt" develops on the back side of the reed, around the "window" area, after some use. This "welt" should be flattened out by rubbing the back side along a carborundum stone or Garnet paper. He also recommends using sandpaper on a dry reed and Dutch rush on a wet reed.

Adjusting Techniques of French Clarinetists

Professional clarinetists in France generally use a soft to medium-soft reed (2 or 2½) and clip the tip with a reed trimmer when it becomes too soft for proper response. If one side of the reed is found to be weak, they either set the reed off-center on the mouthpiece to compensate for the

imbalance, or trim the weak side (along the rails) a bit with sandpaper or emery stone for balance.

Another point in common among French clarinetists is their preference regarding the fibre structure of the reed. They seem to prefer a thin tip, thin sides with daylight showing on both sides past the "heart," and heavy in the center from the heart down to the reed shoulders (see Figure 4).

Figure 4

The reeds are kept on glass after playing to keep them flat and dry. It appears that not many French clarinetists do much in the way of scraping reeds for adjustment and far less of very detailed technique of scraping a reed. The average reed measurements are given in Figure 5 in millimeters. The favorite mouthpiece is the Van Doren 5-RV or 5-RV lyre.

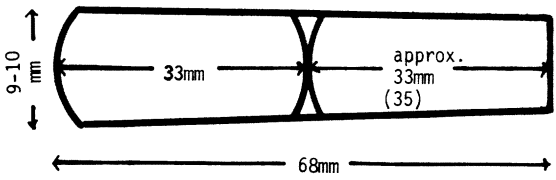

Figure 5

Sublett Scott's Adjustments

Sublett Scott of Oklahoma City University is the advocate of an adjusting technique that varies considerably from other recommended procedures. His theory of reed adjustment is based on the premise that the segment of the reed which is in free vibration is from the fulcrum (the point on the mouthpiece lay where the reed and mouthpiece begin to separate) up to the tip; below that point, the reed is stationary. It is at the fulcrum, therefore, that all adjustments to the reed must be made. As the reed must more or less "bend" over the mouthpiece lay, the only adjustment possible or necessary is that which affects the thickness or strength of the reed at this point. The other qualities of the reed are inherent in the cane and cannot be adjusted. Scott suggests the following scraping procedures:

1. Find the fulcrum by slipping cigarette paper between the reed and mouthpiece until the paper can go no further without forcing.
2. Mark this point on the reed with a pencil, then draw lines ¼″ above and ¼″ below this point. This is the area to be scraped.
3. The reed remains on the mouthpiece during the scraping procedure. Using a pocket-knife,[3] scrape off only a small portion at a time, scraping toward the tip only; lift the knife blade between strokes.

[3] Scott recommends the pocket-knife or scissors blade and the standard reed clipper rather than razor blades, Dutch rush, or sandpaper which he regards as less effective.

4. If the reed is too thick at the fulcrum to prevent closing of the gap (distance between the reed and the mouthpiece tip) with normal lip and breath pressure, it must be weakened by scraping off a light layer of cane at the fulcrum.

5. If the reed is too soft, a small portion of the tip is trimmed off. Because the reed is shorter, a thicker cross section of it lies over the fulcrum when replaced on the mouthpiece (see Figure 6).

MOUTHPIECE REED DIAGRAM

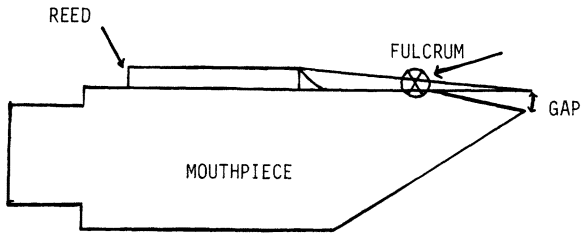

Figure 6

THE RESEARCH PROJECT

The original research involved in this project was influenced by ideas from two separate but closely related sources. The first came from Roderick Gordon of Southern Illinois University who suggested that a reed vibrates both longitudinally (along its length) and latitudinally (from the center out towards each side). He surmised that to improve responses from a reed it should perhaps be adjusted so that it vibrates more freely along its length and less from center to sides.

The second source was a description of a reed vibrational pattern study by McGinnis and Gallagher whose findings indicate that ". . . for a tone of good quality the tip of the reed vibrates as a unit; that is, it remains parallel to the facing of the mouthpiece."[4]

In order to evaluate these two ideas, it was decided to examine the reed's vibrational pattern or tendencies by artificial means. In place of scientific laboratory equipment, a simple household device was substituted. The bell of a clarinet was removed and the nozzle of a small, hand-held vacuum cleaner was taped to the lower end of the instrument. Suction was created by closing all open holes and keys on the clarinet. By controlling the opening in the hose of the cleaner, it was possible to control the amount of suction of air pulling into the bore of the clarinet. Too great a suction split several reed tips during the early stages of this phase of the experiment.

First results with this approach indicated that the reed "rocked" (had tortional vibration) at the corners while vibrating. The center of the

[4] C. S. McGinnis and C. Gallagher, "The Reed's Mode of Vibration," *The Clarinet* (Fall 1951), 10-12.

REED TORTIONAL VIBRATION PATTERN

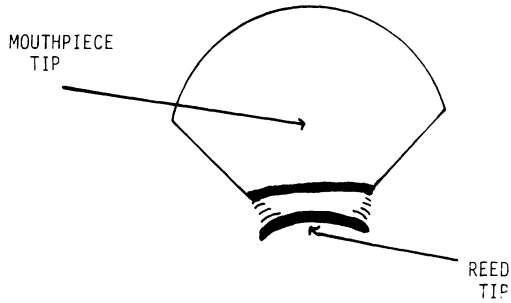

Figure 7

reed tip appeared to vibrate less, or slower, than the corners thus producing a curved appearance to the reed while in motion (see Figure 7). On the basis of these results and the findings of McGinnis and Gallagher, it was desirable to find a method for causing the reed to act like a hinge so that it would vibrate more along its length. This in turn would cause it to vibrate more evenly along the reed tip so that the reed tip would remain parallel to the mouthpiece tip during its vibrational pattern.

It was concluded that the most active segment of the reed is from the fulcrum to the reed tip. The reed had to be given more freedom somewhere along its length and it was decided that the fulcrum was the most logical place. With the reed still attached to the mouthpiece, the distance from the fulcrum to the reed tip was measured and marked on the reed at the fulcrum. The reed was removed from the mouthpiece and placed on a piece of lucite glass and with a very sharp reed knife the cane was "scored," that is, a thin groove was cut into the cane. The groove was cut very lightly and just deep enough into the cane to cut the fibres of the outer layer. The cut, or groove, extended from one side of the vamp to the other (see Figure 8).

The vibrational pattern was checked again, using the procedure described above. On the basis of visual scrutiny, the entire reed tip appeared to remain parallel to the mouthpiece tip while in motion. In order to check further on the results of cutting a groove into the reed's vamp at the fulcrum, the reed's vibrational pattern was photographed. Basic equipment consisted of a General Radio *Strobo-Tac* which emits strobe flashes. These were synchronized with the speed of the reed's vibrations. In addition, photoflood lights in reflectors and a camera loaded with high-speed film were used. Photographic results indicated a change in the reed tip vibrational pattern, the change being that the reed tip remained parallel to the mouthpiece tip.

The Practical Results

This technique of adjusting reed response was subjected to a series of tests under actual performance conditions by one of the authors. Results indicate the following:

GROOVE-IN-VAMP TECHNIQUE

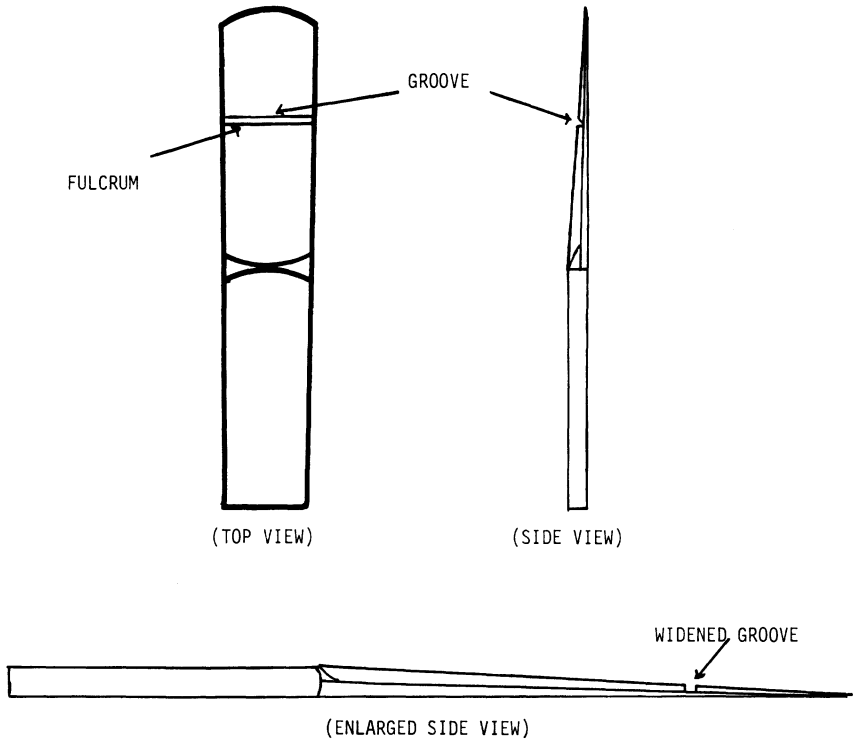

Figure 8

1. On reeds of normal strength there seemed to be an improvement in response but the reed felt softer, as though it had changed to a reed of lesser strength.

2. Reeds of slightly stronger than normal strength played by the author showed immediate improvement in response. Reeds which were of greater than normal strength required a deeper groove or widening of the original groove by the use of a small file rather than a reed knife.

3. When the groove was cut at the fulcrum, but on the back side of the reed, the reed softened considerably, almost beyond practical use.

4. When grooves were cut both on the vamp and the back side of the reed at the fulcrum, results indicated that this was better than a groove on the back side only, but not as good as cutting a groove on the vamp.

5. Grooves cut below the fulcrum indicated no perceptible change in reed response.

6. Grooves cut very near the reed tip (about 1/8″ to 1/4″) indicated a change in reed response for the worse.

7. Grooves cut into the reed vamp at the position where the dark shading of the reed "heart" comes to a point near the reed tip resulted in reed response with no core or "center" to the tone.

8. A groove cut at the fulcrum which did not result in a responsive low register could be widened or deepened with a file to lessen the sluggishness.

9. Reeds which were somewhat dull or a bit too dark in tone were made more flexible and the tone somewhat brighter after the groove was cut in the vamp at the fulcrum.

10. Reeds with a groove cut in the vamp generally retained the same basic response which they had immediately after the cut. This response remained for a period of from one to three weeks. Reeds which were normal or a bit soft at the start, became softer very quickly after having a groove cut into the vamp, within a matter of one to three days. One cooperating student in the experiment stated that his reed, with a groove cut into the vamp at the fulcrum, served his needs for a period of about five weeks with little or no noticeable change in response, and under heavy playing conditions.

11. Little or no modification in the structural balance in the reed was required after cutting a groove at the fulcrum. One change in this adjusting technique was to thin the reed tip with Dutch rush or silicon carbide paper.

12. Results were more quickly evident with the cutting-in-the-groove technique than with other known methods of reed adjusting.

13. Experience justifies recommending that a reed at least one-half strength stronger than normal be used when applying this technique.

Comparison Experiments

A comparison was made between the groove method of adjusting reeds and other known techniques. Three reeds were selected from the same box of the same brand and strength. Choice was based on reeds which were as similar as possible in responsive qualities and slightly stronger than those normally selected by the authors. These reeds were checked against the list of factors considered in selecting a reed. The item which seemed to need most attention was an uneven table at the stock (butt) end of the reed. This was flattened by rubbing the table against sandpaper (fine) placed on a flat surface. The reeds were numbered.

Reeds numbered one were tested and adjusted using Dutch rush, a needle file, a reed knife, and silicon carbide. Areas which needed adjusting and fixing were scraped according to suggestions and recommendations of leading artists and authorities described earlier.

Reeds numbered two were tested and adjusted according to the method described by Sublett Scott. Equipment consisted of a reed knife, silicon carbide, and a piece of lucite glass. The limits of the scraping area on the reed were those prescribed by Scott.

Reeds numbered three were adjusted by the groove cut into the vamp method.

Groups of three reeds each were selected, tested, and adjusted in the manner described above. Each group was checked for playing response from day to day over a period of seven days.

As a result of the comparisons made it can be said that all three methods did aid in improving some aspect of the reed function. Reeds in group one required more time for their adjustments and the results were not immediately evident, whereas in groups two and three there was an immediate change in reed response. The method employed with those in group one also required more experience with the use of reed adjusting equipment as well as a more sensitive technique.

With the reeds in group two it was found necessary to make some modifications after the original adjustment. To achieve a bit more brilliance in the tone, the entire reed was rubbed with silicon carbide. To improve the general staccato, the reed tip was thinned down.

Both of the methods applied to reeds in groups two and three helped the reed bend over the fulcrum and against the mouthpiece more easily. The groove cut made in group three reeds discouraged the tortional vibration and improved the longitudinal vibration characteristics. Little or no modification was needed in the structural balance of the reed. Modification, if any, was usually in the form of thinning the reed tip with Dutch rush. Where reed quality was improved by the groove cut technique the reed remained responsive as long as reeds adjusted by any other technique or as responsive as reeds which needed no adjustment at all.

Southern Illinois University

Bibliography

1. Carl Baermann, *Method for Clarinet, Part I* (New York: Carl Fischer, Inc., or Boston: Cundy-Bettoney Company).

2. Daniel Bonade, *The Art of Adjusting Reeds* (Kenosha, Wisconsin: G. Leblanc Corporation, 1957).

3. Walter M. Eby, *Reed Knowledge* (New York: Walter Jacobs, Inc., 1953).

4. Rudo S. Globus (editor), *The Woodwind Anthology* (New York: Woodwind Magazine, 1952).

5. Kenneth S. Jaffrey, *Reed Mastery* (New South Wales, Australia: Kenneth S. Jaffrey, Publisher, 1956).

6. Gustave Langenus, *Monograph on the Clarinet* (New York: Carl Fischer, Inc.).

7. Kalmen Opperman, *Handbook for Making and Adjusting Single Reeds* (New York: Chappell and Company, 1956).

8. Sublett Scott, "The Selection and Evaluation of Clarinet Reeds," (Unpublished paper, Oklahoma City University).

9. Jack Spratt, *How To Make Your Own Clarinet Reeds* (Stamford, Connecticut: Jack Spratt Woodwind Shop, 1956).

10. Keith Stein, *The Art of Clarinet Playing* (Evanston: Summy-Birchard, 1958).

11. William H. Stubbins, *The Study of the Clarinet* (Ann Arbor, Michigan: George Wahr Publishing Company, 1963).

12. Larry Teal, *The Art of Saxophone Playing* (Evanston: Summy-Birchard, 1963).

13. Frederick Thurston, *Clarinet Technique* (New York: Oxford University Press, 1957), second edition.

14. Everett L. Timm, *The Woodwinds* (Boston: Allyn and Bacon, Inc., 1964).

15. Frederick W. Westphal, *Guide to Teaching Woodwinds* (Dubuque, Iowa: William C. Brown, 1962).

16. Robert Willaman, *The Clarinet and Clarinet Playing* (Salt Point, New York: Robert Willaman, 1949).